CTU
CZECH TECHNICAL UNIVERSITY IN PRAGUE

DEPARTMENT OF LANDSCAPE WATER CONSERVATION

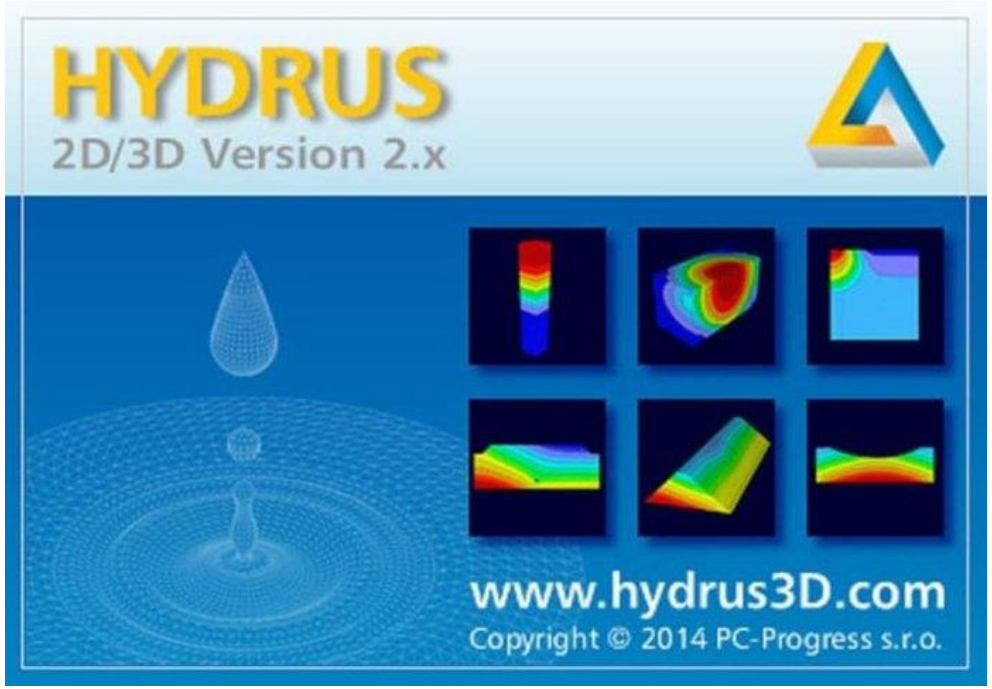

Hydrus 3D simulation

Jakub Jeřábek and Tailin Li (Terrence)

tailin.li@fsv.cvut.cz

Czech Technical University in Prague, Czech Republic

2022.12.05

Objective

- Get familiar with HYDRUS 3D (3D simulations)
- Generate geometry and mesh in HYDRUS 3D.
- Set up 3D model based on tutorials and case studies
- Set up your owner 3D model

3D simulation

- Why do we need 3D simulation?
- What do you need for 3D simulation?

3D simulation

- Why do we need 3D simulation?
  - 3D effect in the system
  - A true-to-life visual representation
  - Provide comprehensive information
- What do you need for 3D simulation?
  - Enough data

Geometry and mesh generation

Three ways of generating 3D:

- 3D - Simple
- 3D - Layered
- 3D - General

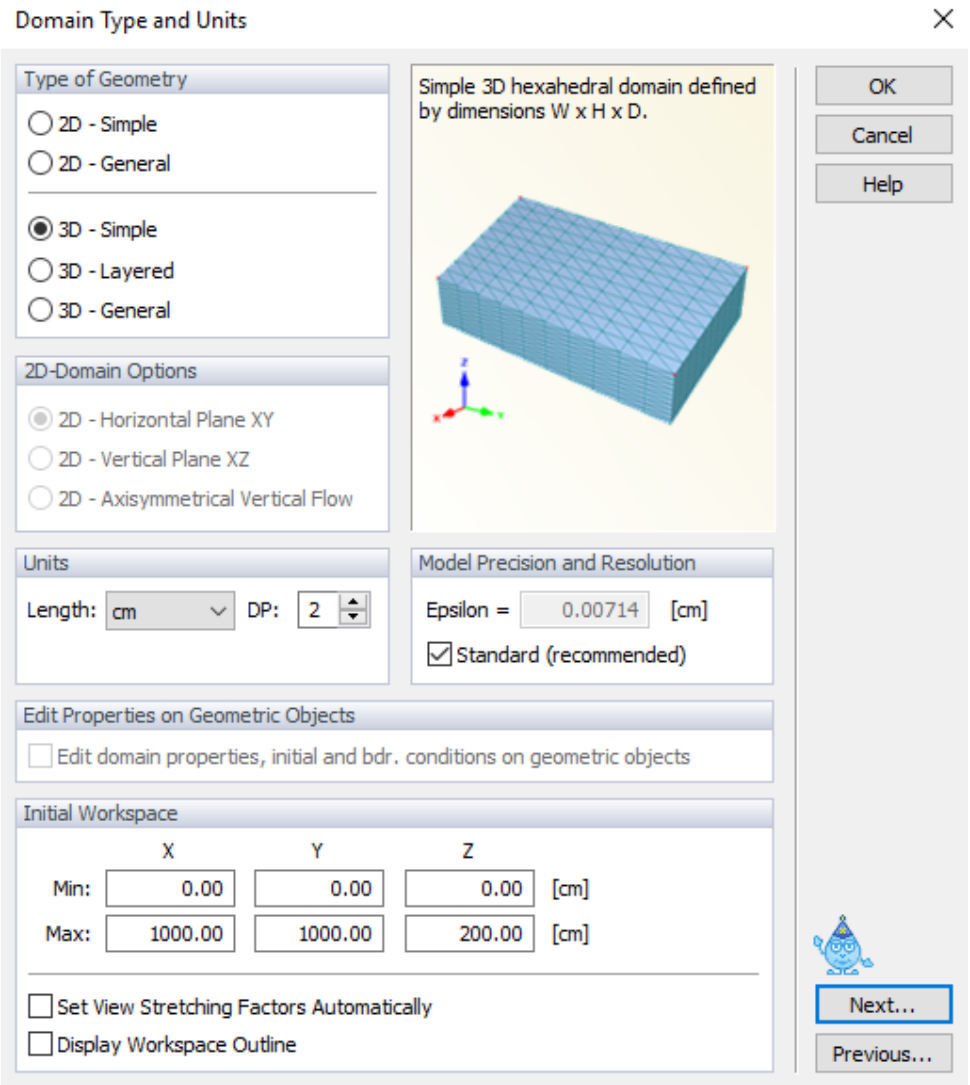

3D simple

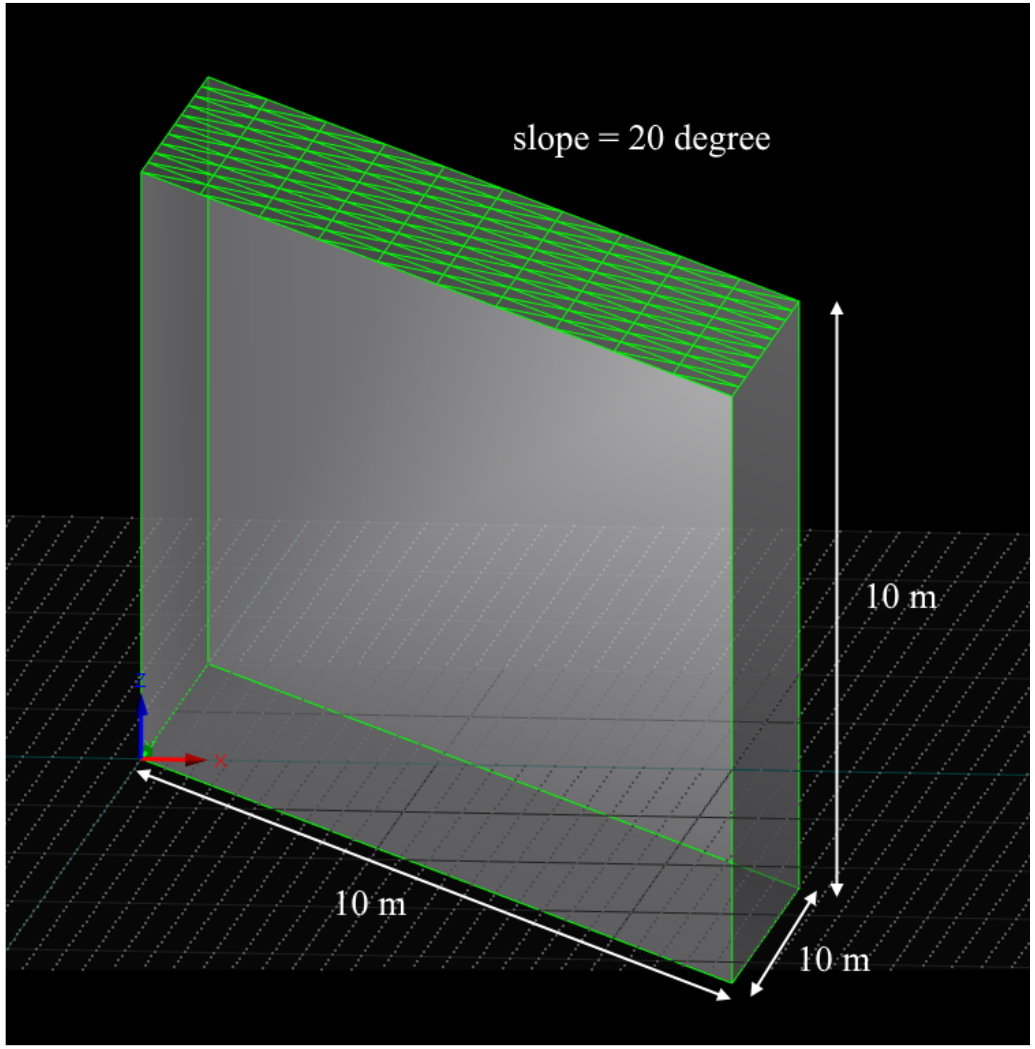

3D layered

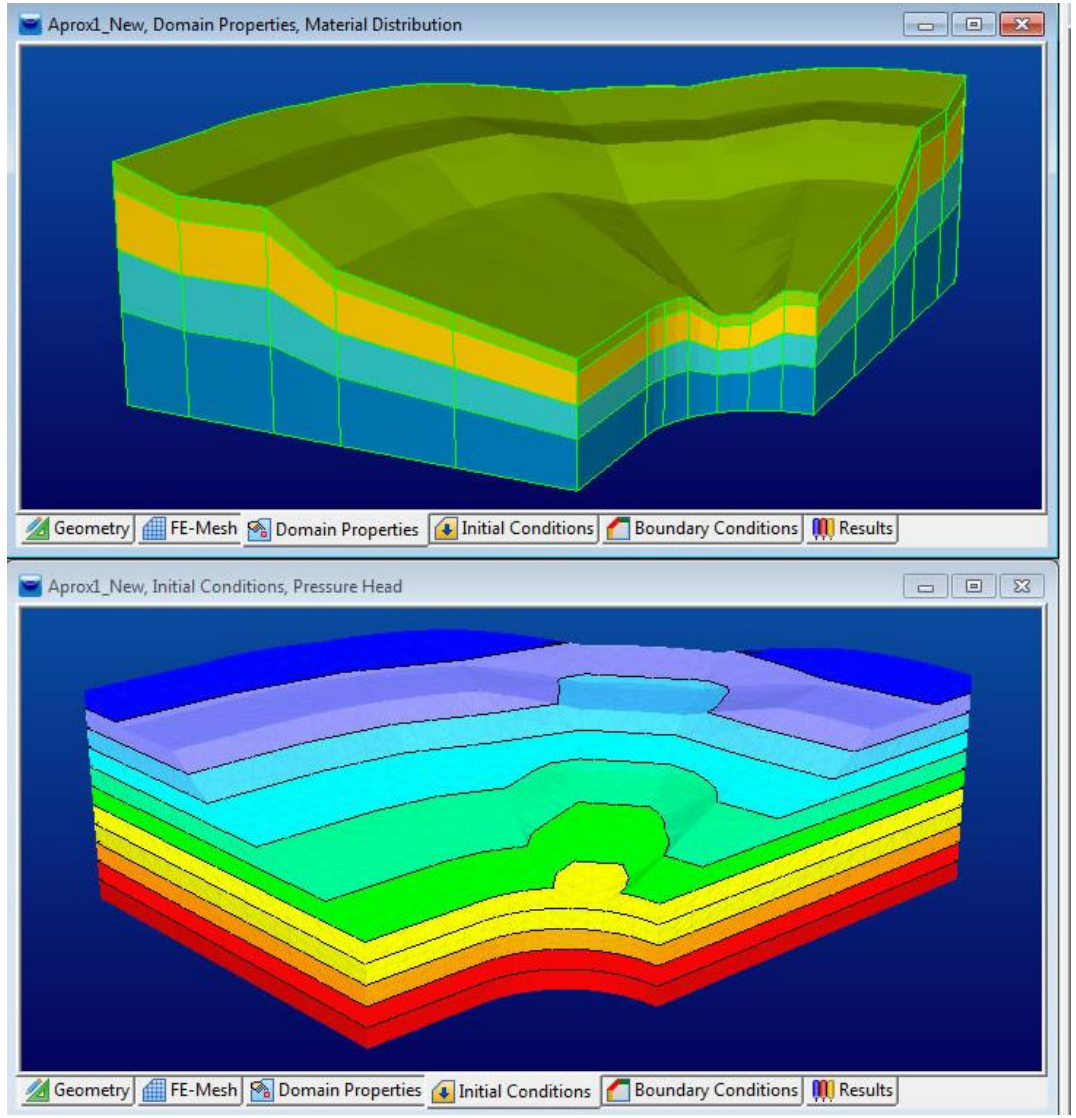
Aprox1_New, Domain Properties, Material Distribution
Geometry
FE-Mesh
Domain Properties
Initial Conditions
Boundary Conditions
Results
Aprox1_New, Initial Conditions, Pressure Head
Geometry
FE-Mesh
Domain Properties
Initial Conditions
Boundary Conditions
Results

3D general

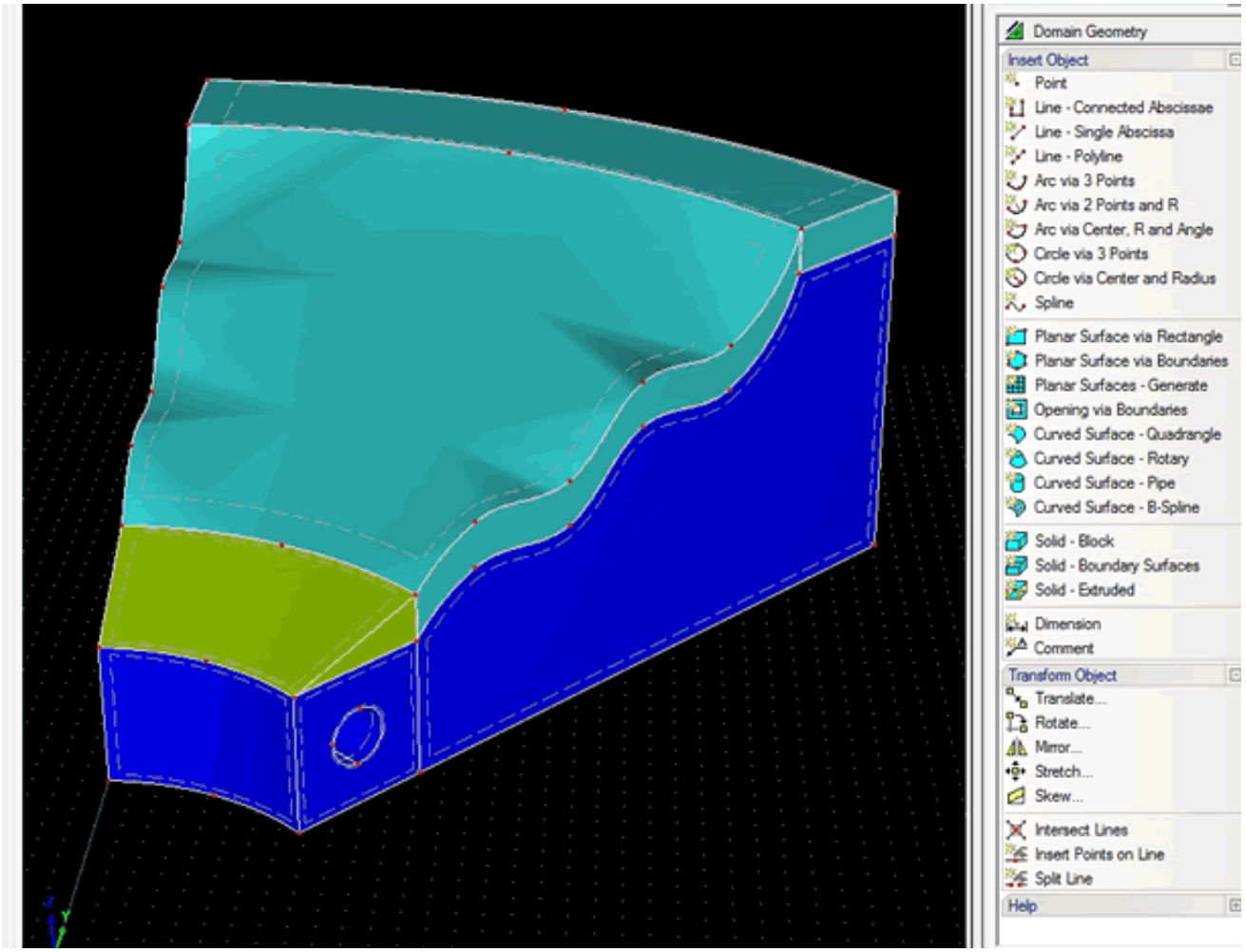
Domain Geometry
Insert Object
Point
Line - Connected Abscissae
Line - Single Abscissa
Line - Polyline
Arc via 3 Points
Arc via 2 Points and R
Arc via Center, R and Angle
Circle via 3 Points
Circle via Center and Radius
Spline
Planar Surface via Rectangle
Planar Surface via Boundaries
Planar Surfaces - Generate
Opening via Boundaries
Curved Surface - Quadrangle
Curved Surface - Rotary
Curved Surface - Pipe
Curved Surface - B-Spline
Solid - Block
Solid - Boundary Surfaces
Solid - Extruded
Dimension
Comment
Transform Object
Translate...
Rotate...
Mirror...
Stretch...
Skew...
Intersect Lines
Insert Points on Line
Split Line
Help

H3D simulation

Steps:

- **Mesh generation**
- **Domain properties**
- **Initial conditions**
- **Boundary conditions**
- **Running model**

H3D simulation

Task 1. Set up a 3D simulation based on the 2D drip Irrigation simulation

Task 2. Set up a flow model for a basin infiltration scenario *

Conceptual model (2D)

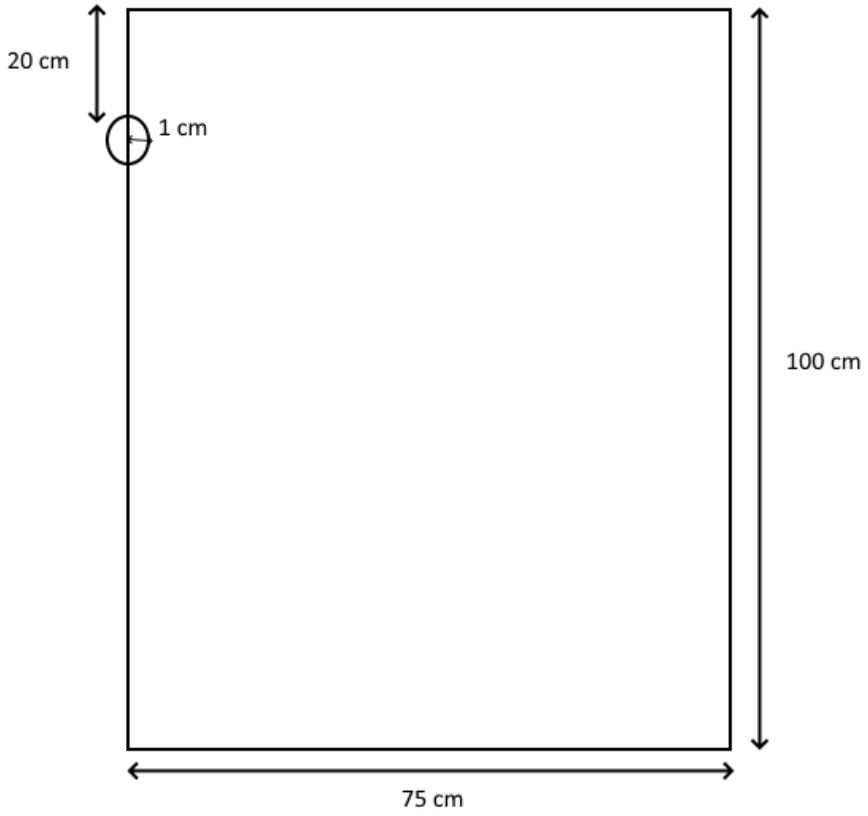

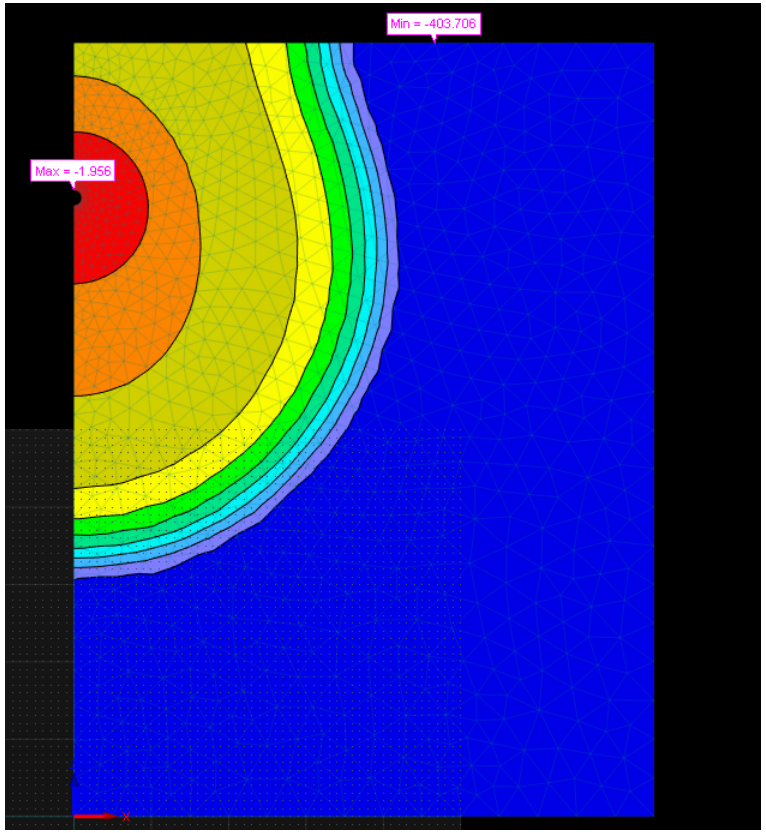

Drip Irrigation (In real life)

2D Simulation

A subsurface line source (e.g. drip irrigation) of water (first without and then with a solute) in a vertical cross-section. The (x, z) transport domain is **75 x 100 cm^2**, with the source located **20 cm** below the soil surface on the left boundary of the transport domain. The radius of the irrigation pipe is **1 cm**. Infiltration is initiated with a variable flux boundary condition and is maintained for 1 day, with the duration of the solute pulse being 0.1 days; with 2 cycles per week.

3D Simulation

We intent to simulate a subsurface line source (e.g. drip irrigation) of water (first without and then with a solute) in a 3D domain. The irrigation nozzle is about **5 cm** wide, the distance between every two nozzles is about **40 cm**. Please include at least **2 nozzles** in your domain. The initial condition and boundary condition remains the same as the 2D simulation. Please insert the observation points into different depths and cross-sections, and compare the results with 2D simulation.

Conceptual model (3D)

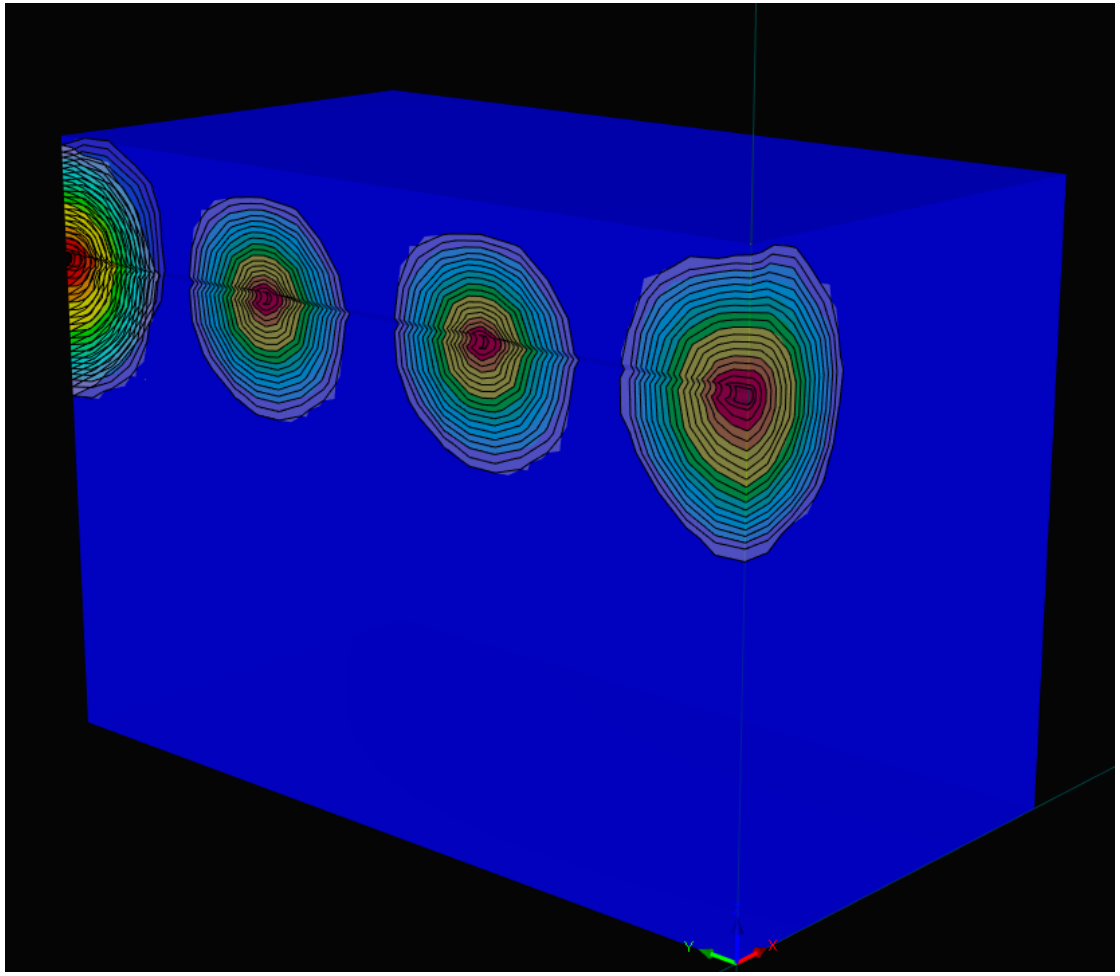

Questions

Which domain type will be used in this simulation?

How to insert observation points at the cross-sections between two nozzles?

How much water has been added to the domain throw drip drainage? And how much water has left the system?

Please make screenshots of the following results from the solute transport model:

- Concentration temporal changes from observation points
- Water content distribution in the end of the simulation
- Concentration distribution in the end of the simulation

H3D simulation